	B	L	W
B=200, L=250 mm	200	250	320
B=200, L=350 mm	200	350	320
B=200, L=450 mm	200	450	320
B=250, L=250 mm	250	250	370
B=250, L=350 mm	250	350	370
B=250, L=450 mm	250	450	370

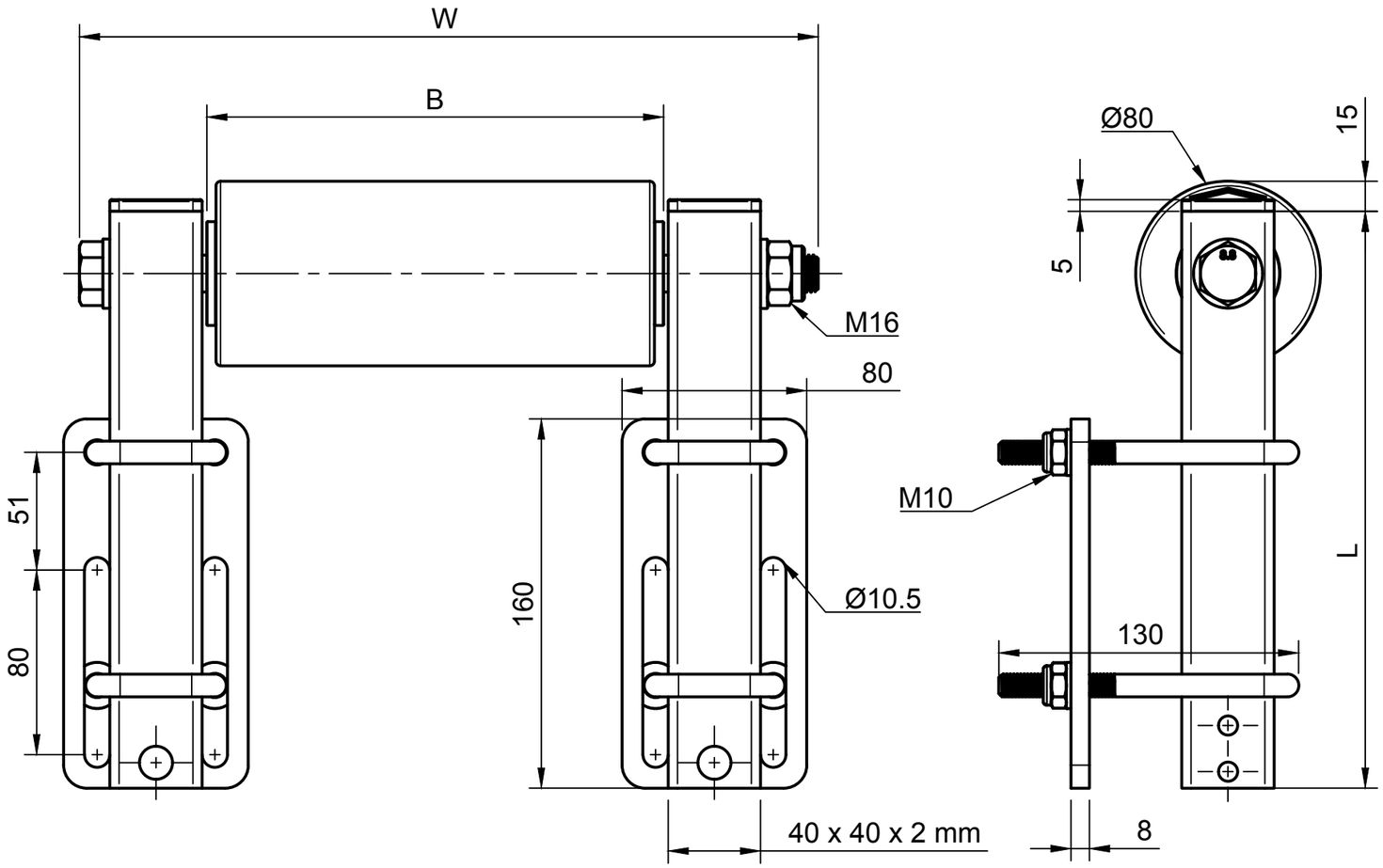

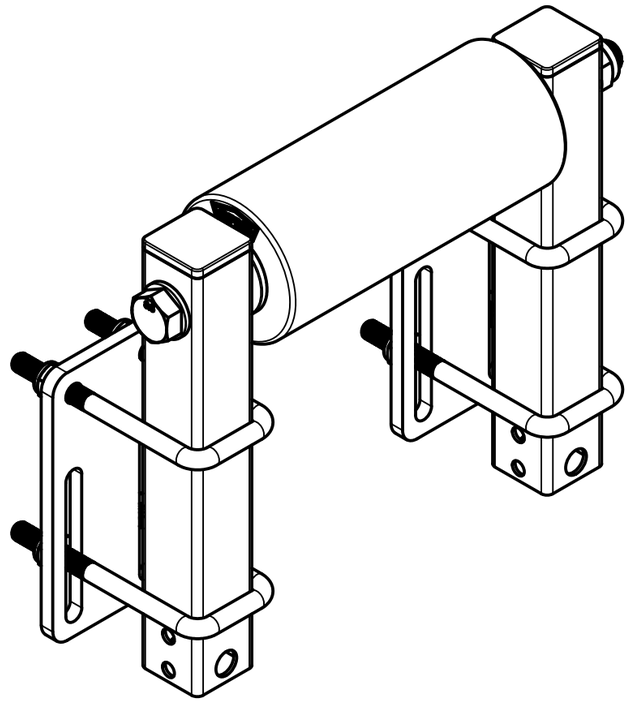

Dept.	Technical reference	Created by	Approved by
F+E		TITAPS GmbH	
		Document type: Assembly Drawing	Document status: A1
		Title: PU side roller with holder	DWG No.: S_BRT_SRAXXX-TPU
			Rev.: / Date of issue: 01.04.2023 / Sheet: 1/1

SUPROD